elements

MODULAR RANGE

KOVACS

DESIGN FURNITURE

elements

MODULAR RANGE

All KOVACS products are constructed from the highest quality New Zealand timbers, the best available componentry, superior cushioning materials and premium quality fabrics. When you choose KOVACS you are investing in lasting good looks, comfort and durability, brought together with world-class design.

A design that is both expansive in style and personalised in use. Elements provides a distinctive approach to assembly, both the arms and backs are interchangeable and are able to be moved and locked to the base unit.

Creative buttoning and supple, supportive and luxurious cushioning make the overall aesthetic a dream-like one. The Elements can be added to and adapted to its environment, being able to evolve a major piece of furniture is a considerable advantage.

Those wishing to use interesting colours and fabric choices can make this a unique and usable piece too, providing another chance to create a bold individual design statement without compromising ongoing comfort. Now versatile and enduring style is elementary.

Configure elements just about any way you want.

DIMENSIONS (CM)	W	D	H
A Unit Base	83	83	45
B Unit Base	83	115	45
C Unit Base	115	115	45
Wide Arm	29	84	62
A Back	85	8	80
B Back	115	8	80

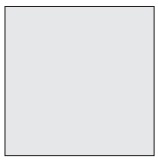

A Unit Base

B Unit Base

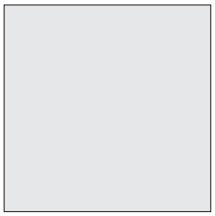

C Unit Base

Wide Arm

A Back

B Back

Cushion Boxed

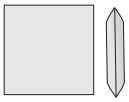

Cushion Envelope

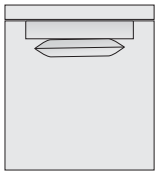

A Unit bundled

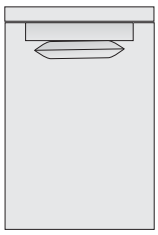

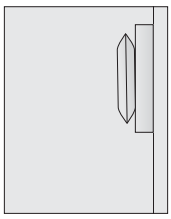

B Unit bundled options

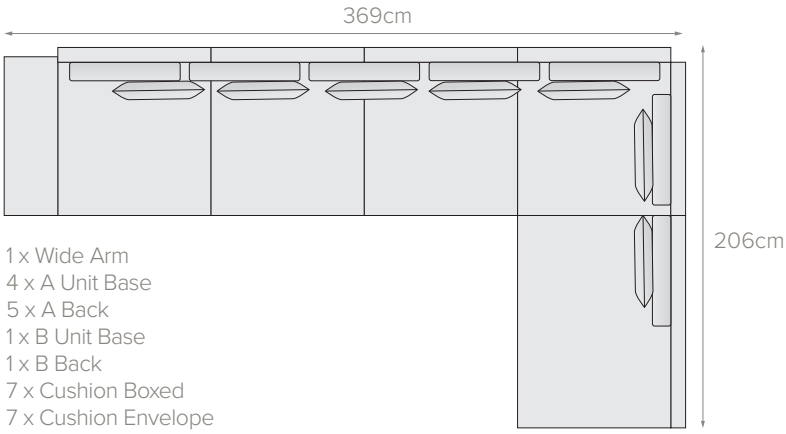

1 x Wide Arm
4 x A Unit Base
5 x A Back
1 x B Unit Base
1 x B Back
7 x Cushion Boxed
7 x Cushion Envelope

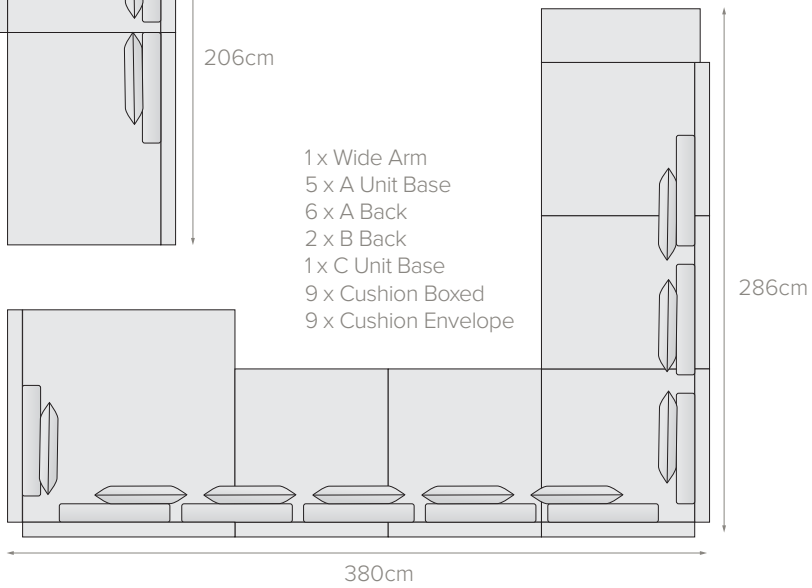

1 x Wide Arm
5 x A Unit Base
6 x A Back
2 x B Back
1 x C Unit Base
9 x Cushion Boxed
9 x Cushion Envelope

KOVACS
DESIGN FURNITURE

1000 FERRY ROAD, PO BOX 19-548, CHRISTCHURCH, NEW ZEALAND.
PHONE: 03 384 2999, FAX: 03 384 2997, EMAIL: INFO@KOVACS.CO.NZ, WEBSITE: WWW.KOVACS.CO.NZ

The company reserves the right to change specifications without prior notice.